Stages 1–2:

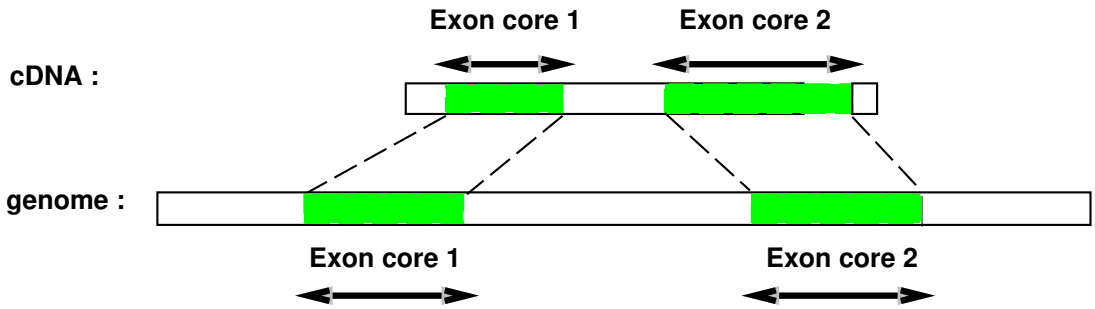

Stages 3–4:

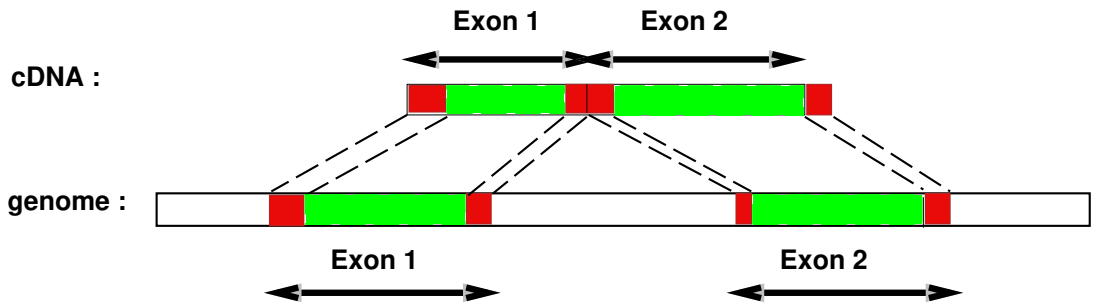

OR

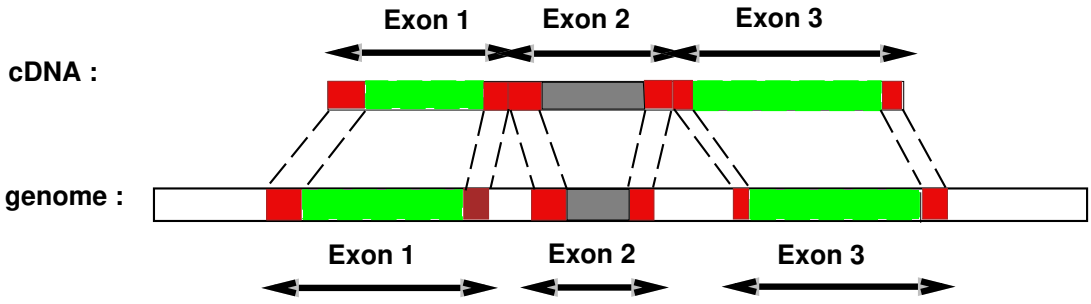

regions delivered in phase 1

regions delivered in phase 2 (greedy extension)

regions delivered in phase 2 (blast re–runs)